254-150-2
Quick Clamp Reversible 6"

PRODUCT DETAILS

- Professional F-clamp
- Ratcheting system for easy adjustment and clamping
- Length 300 to 600 mm
- High clamping capacity, up to 510 kg
- Capacity 200 to 600 mm
- Steel guide, body and jaws
- Aluminium handle with plastic trigger
- Non-slip braking mechanism
- Fix top pad and swivel bottom pad.
- Retail packaging with tag for relevant information

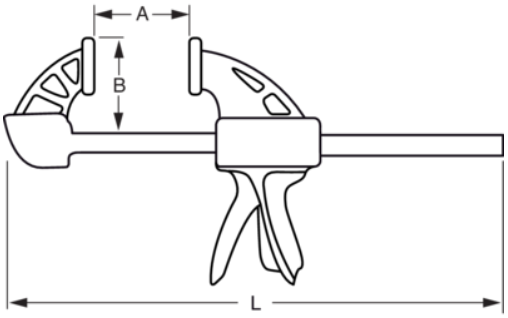

PRODUCT ATTRIBUTES

Product	L	A	B	g
254-150-2	335 mm	150 mm	60 mm	487 g