64C-300
C-Shape Locking Pliers

PRODUCT DETAILS

- C shape locking pliers
- Oversized opening for holding large parts
- Small jaw tips for accurate gripping
- Chrome molybdenum steel
- Nickel plated

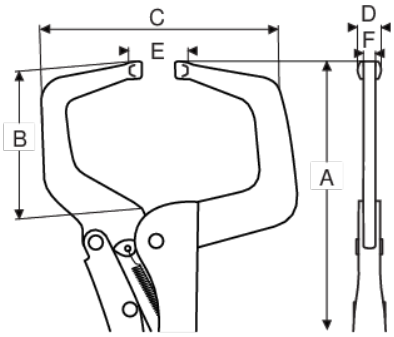

PRODUCT ATTRIBUTES

Product	A	B	C	D	E	F	g
64C-300-1	275 mm	90 mm	140 mm	14 mm	0-65 mm	7 mm	775 g